MXL Series LED Drivers

DL-80Z-A/P-MXL (100K Hours Lifetime)

Specification V2.0

GUANGDONG DONE POWER TECHNOLOGY CO.,LTD

Features

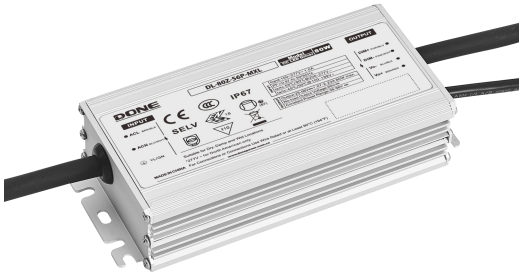

- Class I structure
- Input voltage:100-277V ~ 50/60Hz
- Efficiency :90%(Typ.)
- Function selection:

  Fixed current : Adjusted by external potentiometer (A version)

  Isolated 3-in-1 dimming: 0-10V/PWM/Resistor; Timer dimming (P version)
- Input surge protection: DM 6kV, CM 10kV
- All-Around protection: IUVP/IOVP/SCP/OVP/OTP
- Ingress protection rating: IP67
- Warranty: 5 years

Applications

Road lighting

Industrial lighting

Stadium lighting

Landscape lighting

Horticulture lighting

E479166

Model list

Model NO.	Input voltage	Output power	Output voltage	Output current	Default current	Eff. (Typ.)	THD (Typ.)	PF (Typ.)
DL-80Z-56P-MXL DL-80Z-56A-MXL	100-277Vac	80W	25-56Vdc	1.07-2.23A	2.0A	90%	7%	0.97
DL-80Z-115P-MXL DL-80Z-115A-MXL	100-277Vac	80W	57-115Vdc	0.5-1.05A	0.7A	90%	7%	0.97

Note :

1. Test conditions for the above parameters: At 100%Load 30 minutes,230 Vac;
2. The maximum output power is 80W ; please refer to the output power Vs. input voltage curve.

Input characteristics

Parameter	Min	Typ.	Max	Note
Input AC voltage range	90Vac	-	305Vac	Refer to output power Vs. input voltage derating curve
Input frequency	47Hz	50/60Hz	63Hz	-
Leakage current	-	-	0.70mA	IEC 60598-1; 240Vac/60Hz
	-	-	0.75MIU	UL 8750; 277Vac/60Hz
Power factor(PF)	0.95	0.97	-	At 100~240Vac and 70%~100% load
	0.92	0.95		At 277Vac and 70%~100% load
THD	-	7%	10%	At 100~277Vac and 70%~100% load
Input current	-	-	1A	At 100Vac and 100% load
Inrush current	-	-	70A	At 230Vac and 25℃ cold start

Output characteristic

Parameter	Min	Typ.	Max	Note
Efficiency DL-80Z-56A/P-MXL DL-80Z-115A/P-MXL	 85.0% 85.0%	 86.0% 86.0%	-	100% load @100Vac Io=1.43A Io=0.7A
Efficiency DL-80Z-56A/P-MXL DL-80Z-115A/P-MXL	 88.0% 88.0%	 90.0% 90.0%	-	100% load @230Vac Io=1.43A Io=0.7A
Efficiency DL-80Z-56A/P-MXL DL-80Z-115A/P-MXL	 89.0% 89.0%	 90.5% 90.5%	-	100% load @277Vac Io=1.43A Io=0.7A
Output voltage range DL-80Z-56A/P-MXL DL-80Z-115A/P-MXL	 25Vdc 57Vdc	-	 56Vdc 115Vdc	100%load output voltage range: 36-56Vdc 76-115Vdc
Open circuit voltage DL-80Z-56A/P-MXL DL-80Z-115A/P-MXL	-	-	 65Vdc 150Vdc	
Output current range DL-80Z-56A/P-MXL DL-80Z-115A/P-MXL	 1.07A 0.5A	-	 2.23A 1.05A	Default current: 2.0A 0.7A
Output current tolerance	-5%	-	+5%	100% load
Output Current Ripple(PK-AV)	-	5% Iomax	10% Iomax	100%load , 20 MHz BW Ripple current = (Peak - Average) / Average
Start-up overshot current	-	-	10%	100% load

Typical values of each parameter at 25 °C, unless otherwise noted.

Output characteristic

Parameter	Min	Typ.	Max	Note
Line regulation	-3%	-	+3%	100% load
Load regulation	-3%	-	+3%	60%-100% load
Turn-on delay time	-	-	1.0s	100% load@230Vac

Note: The output current range is limited by the input and output voltage, please refer to I-V Work area curve

Dimming characteristic (P version)

Dimming	Parameter	Min	Typ.	Max	Note
0-10V Dimming (Optional)	Safe operating voltage	0V	-	10V	Output current of the dimming port is 150 μA (Typ.)
	Dimming range	10%	-	100%	
	Recommended dimming input range	0V	-	10V	
	Turn-on voltage	0.6V	0.8V	1.0V	Afterglow maybe appear after dimming off , need test with lighting fixture
	Turn-off voltage	0.4V	0.5V	0.6V	
PWM Dimming (Optional)	PWM in high level	9.5V	-	10.5V	-
	PWM in low level	0V	-	0.3V	-
	PWM in frequency scope	300Hz	-	2000Hz	-
	PWM in duty cycle	1%	-	99%	-
	Turn-on duty cycle	6%	8%	10%	-
	Turn-off duty cycle	4%	5%	6%	-
Resistor Dimming (Optional)	External resistor value	10KΩ	-	100KΩ	-
	Dimming range	10%	-	100%	Full power output at 99% duty cycle
Timer Dimming (Optional)	3 modes:Timing,Virtual Midnight,Self-adaptive				Default close, Set by the programmer
Output lumen compensation	Setting the output power with reference to the luminaire life				Default close, Set by the programmer

Note: Version P supports 0-10V dimming (with OV controllable). The maximum voltage that the dimming port can withstand is 12V. If the external power supply voltage exceeds 12V or the signal line is reversed, it will cause damage to the power supply.

Typical values of each parameter at 25 °C, unless otherwise noted.

Protection

Parameter		Description			
Input Under Voltage Protection (IUVP)	Under Voltage Protection	70Vac	80Vac	90Vac	Turn off the output when the input voltage falls below protection voltage
	Under Voltage Recovery	75Vac	85Vac	95Vac	Auto Recovery. The driver will restart when the input voltage exceeds recovery voltage.
Input Over Voltage Protection (IOVP)	Over Voltage Protection	310Vac	325Vac	350Vac	Turn off the output when the input voltage exceeds protection voltage.
	Over Voltage Recovery	300Vac	315Vac	330Vac	Auto Recovery. The driver will restart when the input voltage falls below recovery voltage.
	Max. of Input Over Voltage	-	-	350Vac	The driver can survive input over voltage conditions of up to 350 Vac for a total of 8 hours without damage.
Output overload protection		Hiccup mode，recovers automatically after fault condition is removed.			
Output short circuit protection		Hiccup mode，recovers automatically after fault condition is removed			
Over temperature protection		Self-recovery type，when the casing temperature is greater than 90℃, the output power decreases gradually.			
Output over-voltage protection		Self-recovery type, automatically recovered after abnormal conditions are removed			

Note: All parameters should be measured at a 230Vac/50Hz input voltage, with a rated load unless otherwise specified.

Environmental

Categories	Parameter
Operating temperature Ta	-40℃ ~ +45℃@100-199Vac -40℃ ~ +55℃@200-277Vac
Operating case temperature for Safety Tc_s	-40℃ ~ +90℃
Operating case temperature for Warranty Tc_w	-40℃ ~ +75℃, 10% ~ 95% RH
Storage temperature,humidity	-40℃ ~ +80℃, 10% ~ 95% RH
Resistant to vibration	10Hz ~ 500Hz, 5G 12 min/cycle, X, Y, Z axis 72 min each
MTBF	200,000 hours (MIL-HDBK-217F),Ta=25℃,230Vac, 80% load
Lifetime	100,000 hours @Tc≤70℃,230Vac, 80% Load

Safety

Safety Categories	Area	Standards	Approved
CCC	China	GB/T 19510.1, GB/T 19510.213	√
CE	Europe	EN 61347-1, EN 61347-2-13	√
ENEC		EN 62384	√
CB	CB member state	IEC 61347-1, IEC 61347-2-13	√
SAA	Australia	AS/NZS 61347.1, AS/NZS 61347.2.13	√
UL	USA	UL 8750	√
CUL	Canada	CSA C22.2 No.250.13	√
EAC	Russia	ГОСТ IEC 61347-1-2019 ГОСТ IEC 61347-2-13-2013	√
BIS	India	IS 15885(PART 2/SEC 13)	

EMC

EMI/EMS Categories	Area	Standards	Approved
CCC	China	GB/T 17743, GB 17625.1	√
CE	Europe	EN IEC 55015 EN 61547 EN IEC 61000-3-2;3-3;4-5	√
EAC	Russia	ГОСТ IEC 61547-2013 ГОСТ CISPR 15-2014 ГОСТ IEC 6100-3-2-2017 ГОСТ IEC 6100-3-3-2015	√
FCC	USA	FCC Part 15 Subpart B	√

RoHS

Our products comply with reference to RoHS Directive (EU) 2015/863 amending 2011/65/EU.

Safety Test Items:

Safety Test Item	UL	CE/CB/ENEC	CCC	Note
Input-output	1600Vac	3200Vac	3200Vac	
Input-Case/Ground	1600Vac	1600Vac	1600Vac	
Input-Dim	1600Vac	3200Vac	3200Vac	
Output-Case/Ground DL-80Z-56A/P-MXL DL-80Z-115A/P-MXL	500Vac 1300Vac	500Vac 1300Vac	500Vac 1300Vac	
Output-Dim DL-80Z-56A/P-MXL DL-80Z-115A/P-MXL	1130Vac 1300Vac	500Vac 2600Vac	500Vac 2600Vac	
Dim-Case	500Vac	500Vac	500Vac	
Insulation Resistance	≥10MΩ			Input-Dim,Test voltage:500Vdc
Ground Resistance	≤0.1Ω			25A/1min;Ta=25℃±10℃

Note: Version P supports 0-10V dimming (with OV controllable). The maximum voltage that the dimming port can withstand is 12V. If the external power supply voltage exceeds 12V or the signal line is reversed, it will cause damage to the power supply.

I-V Working area

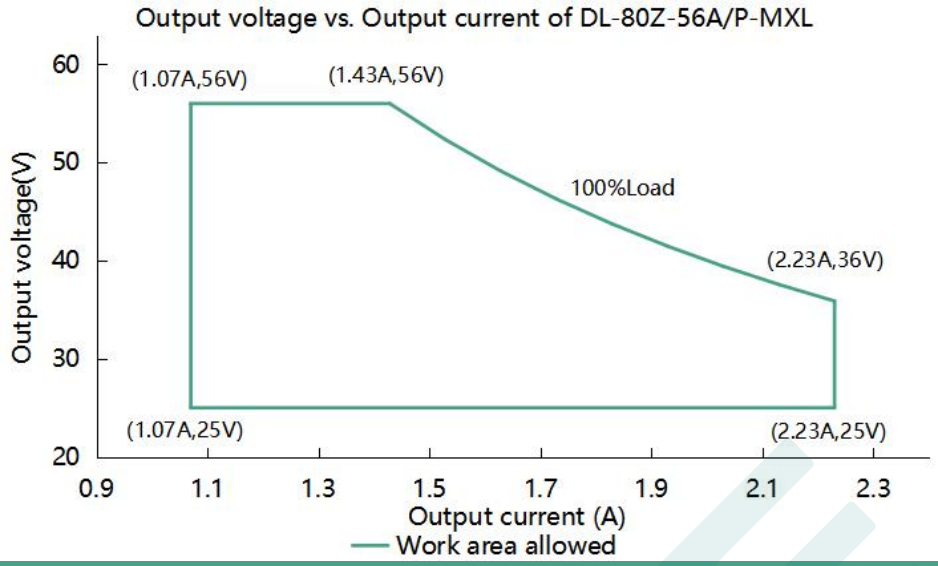

Load	Output								
Output Voltage	25V	29V	33V	36V	42V	46V	48V	52V	56V
Output Current	2.23A	2.23A	2.23A	2.23A	1.90A	1.73A	1.67A	1.54A	1.43A
Output Power	55.8W	64.7W	73.6W	80.0W	80.0W	80.0W	80.0W	80.0W	80.0W

I-V Working area

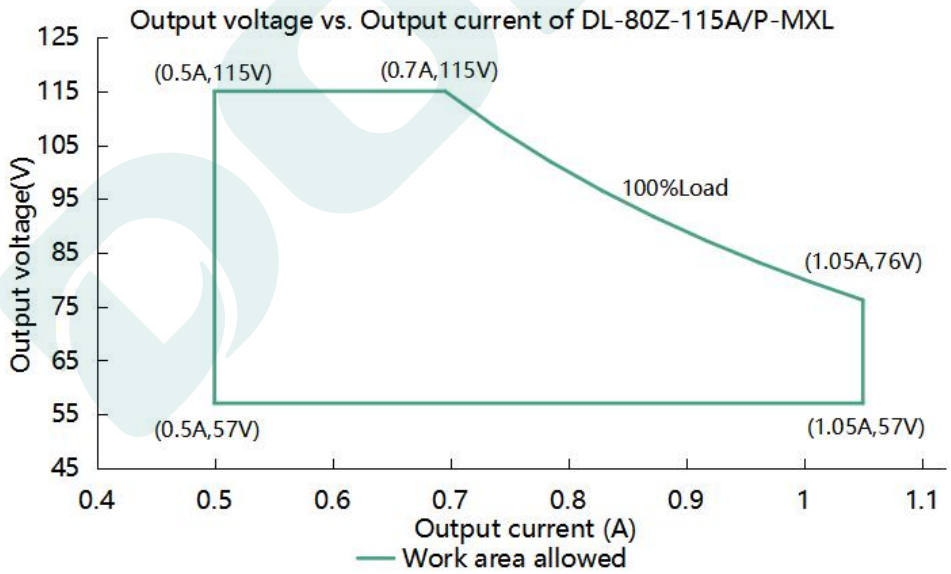

Load	Output								
Output Voltage	57V	68V	76V	86V	92V	98V	104V	109V	115V
Output Current	1.050A	1.050A	1.050A	0.930A	0.870A	0.816A	0.769A	0.734A	0.700A
Output Power	60.0W	71.0W	80.0W	80.0W	80.0W	80.0W	80.0W	80.0W	80.0W

Typical values of each parameter at 25 °C, unless otherwise noted.

Inrush current

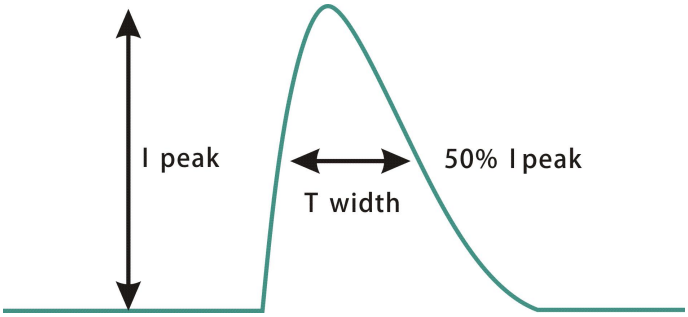

Input voltage	Peak current	T(@50% Peak current)
100Vac	23.50A	100US
230Vac	41.33A	100US
277Vac	65.20A	100US

Output power vs. Input voltage

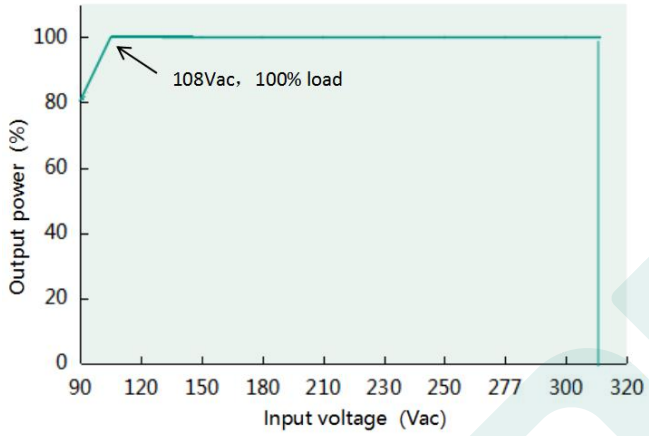

Eff. vs. Load (DL-80Z-56A/P-MXL) (Io=1.43A)

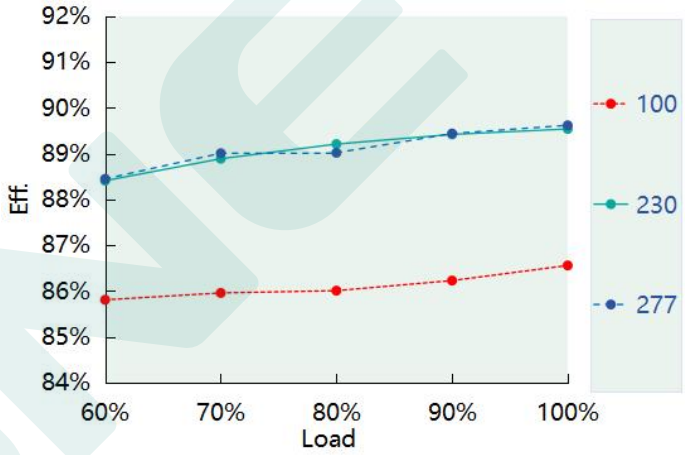

Power Factor VS. Load (DL-80Z-56A/P-MXL)

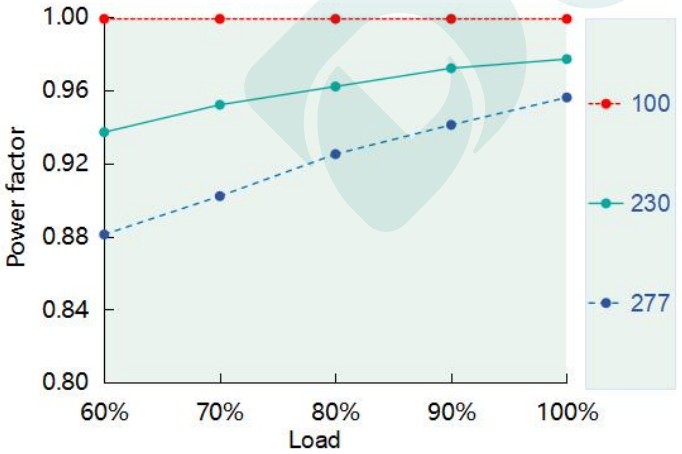

THD VS. Load (DL-80Z-56A/P-MXL)

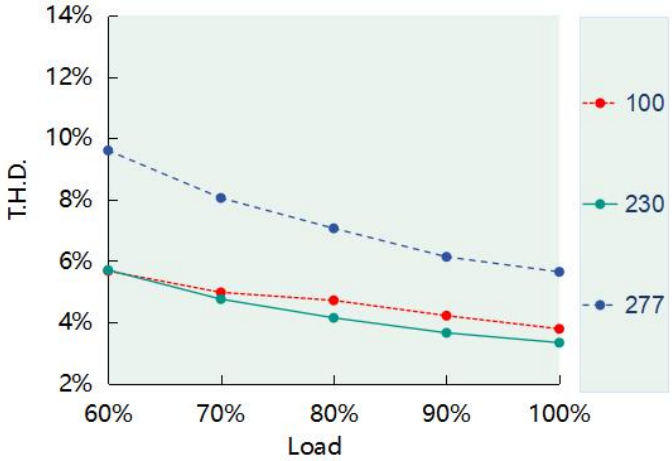

Typical values of each parameter at 25 °C, unless otherwise noted.

Eff. VS. Load (DL-80Z-115A/P-MXL) (Io=0.7A)

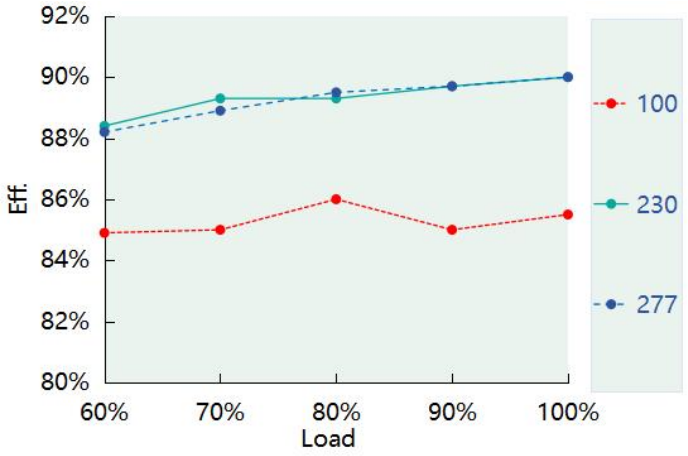

Power Factor VS. Load (DL-80Z-115A/P-MXL)

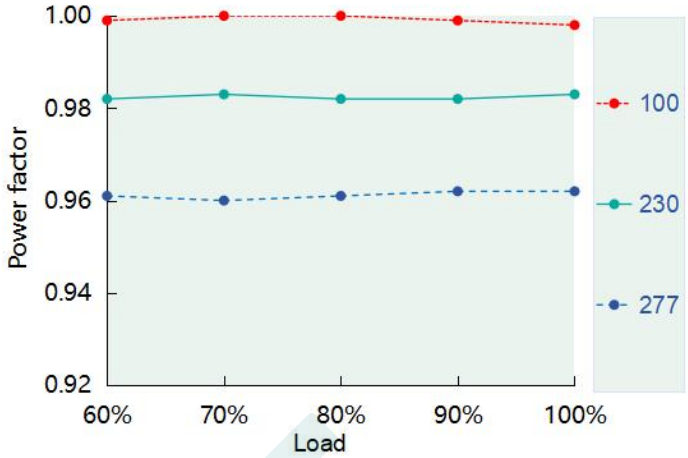

THD VS. Load (DL-80Z-115A/P-MXL)

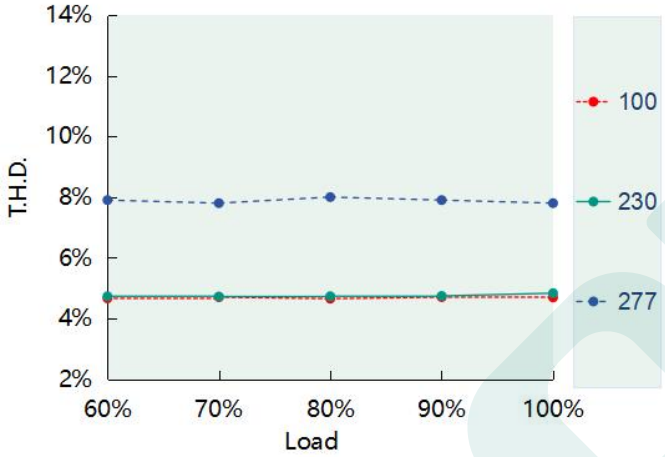

Tcase vs. Lifetime

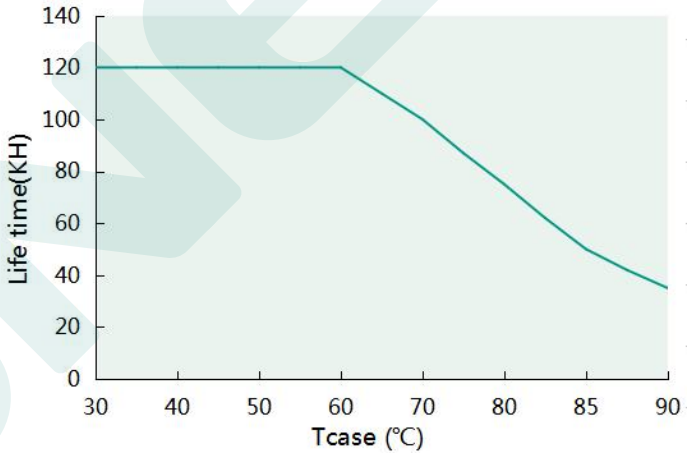

Output power vs. Tcase

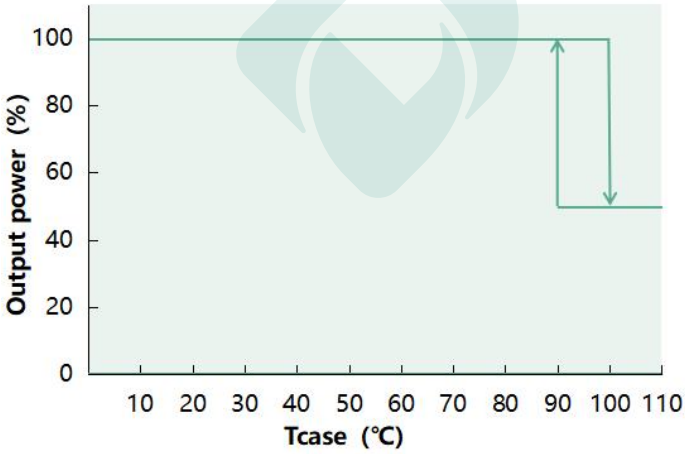

Typical values of each parameter at 25 °C, unless otherwise noted.

Dimming operation

3-in-1 dimming function (P version only)

Connect a 0-10V Dimmer or 10V PWM signal or resistor between DIM+ and DIM-

- **0-10V dimming:**

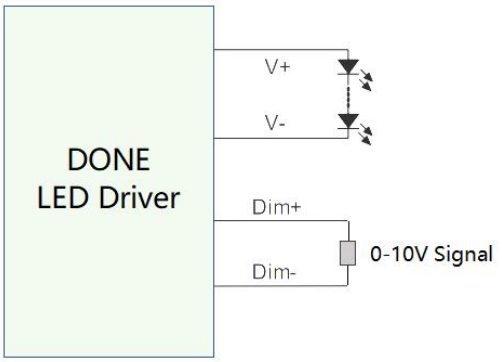

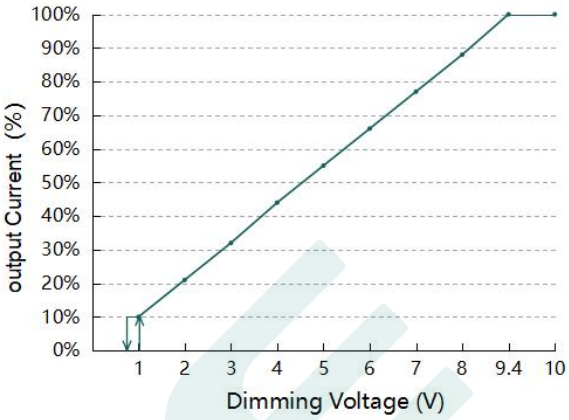

- **PWM dimming :**

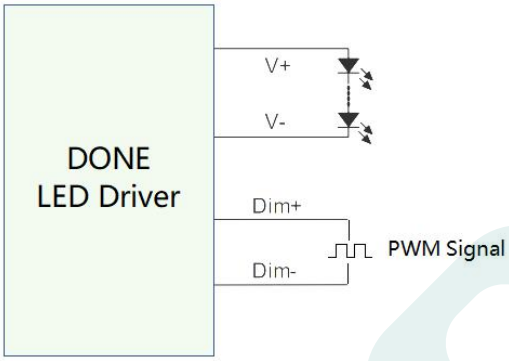

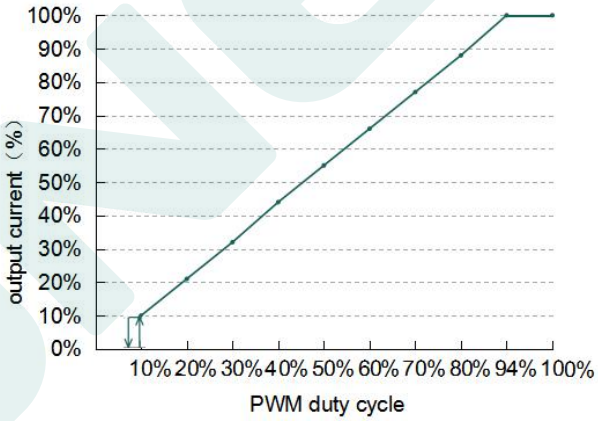

- **Resistor Dimming:**

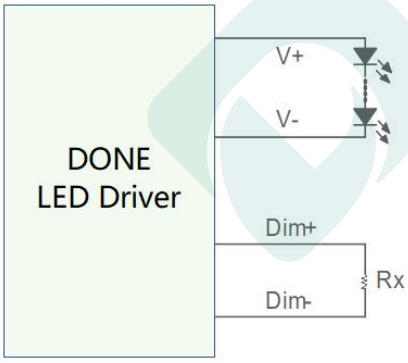

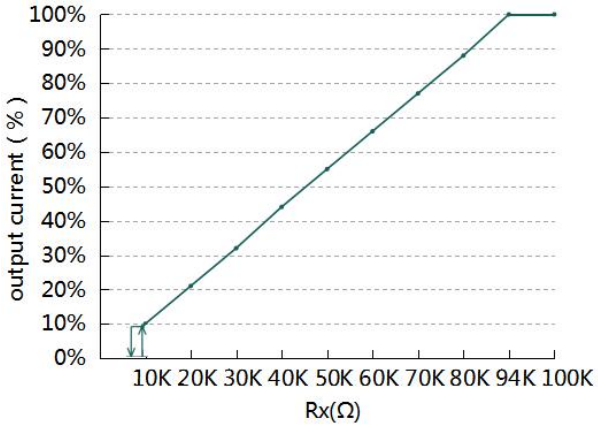

Remark:

1. Positive and negative logic dimming can be programmed.
2. Dimming-off only applies to positive logic.

Programmable Connections

Suitable for MXG, MXL,MXC,MXS,MAS,PXS Series.

Mode 1

Visual Programming

1. Set the output parameters through the control signal line, set the output current and 0-5V/0-10V/3-in-1/PWM optional.
2. Timer dimming,Traditional/Self-adaptive midnight/Self-adaptive percentage optional, support up to 6 segments;
3. Set output output lumen compensation(OLC);
4. Set the lifetime warning
5. Set the OTP parameter
6. After setting is completed, then click the Save button, download it to the offline programmer and the driver setup is complete.

Mode 2

Off-line programmable :

1. Download the program to the programmer;
2. Connect the dimming wire with the programmer, press the programmer button , the programmer will give you a Beep and indicator light turns green to tell you the installation completed.

For more details,Please see the “DONE POWER OFFLINE PROGRAMMING TOOL V2.0 “ file.

Mechanical specification

Size (mm)	L120*W63*H33

DL-80Z-56P/115P-MXL

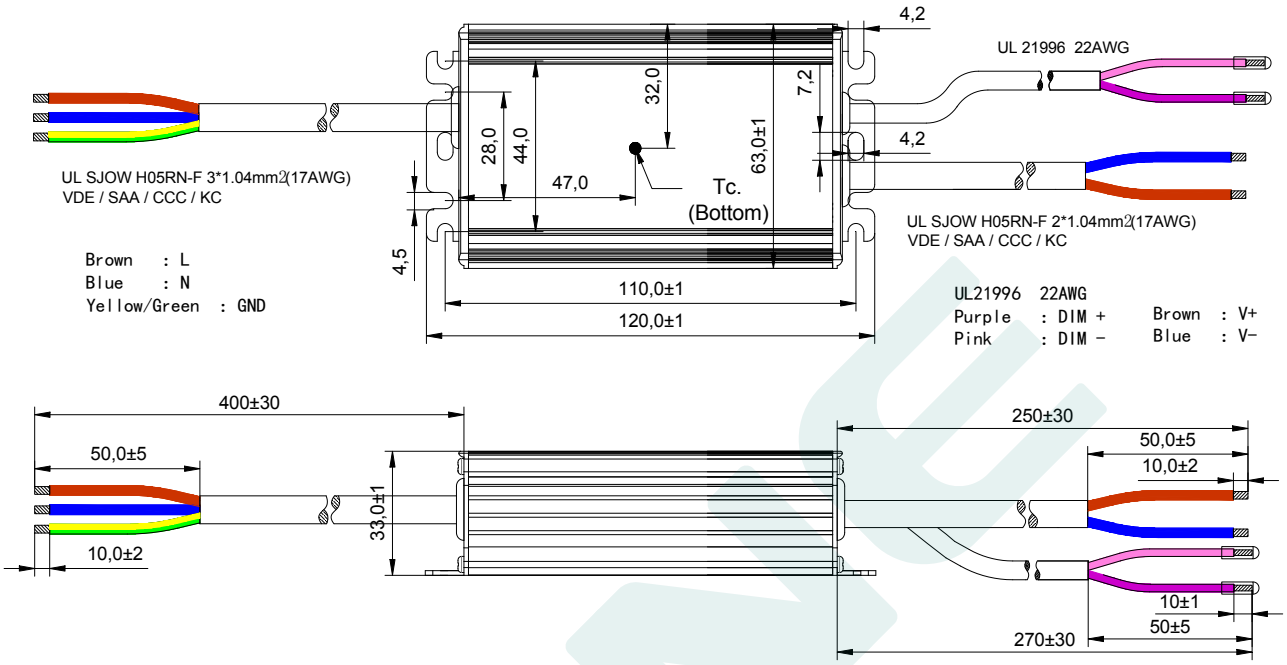

DL-80Z-56A/115A-MXL

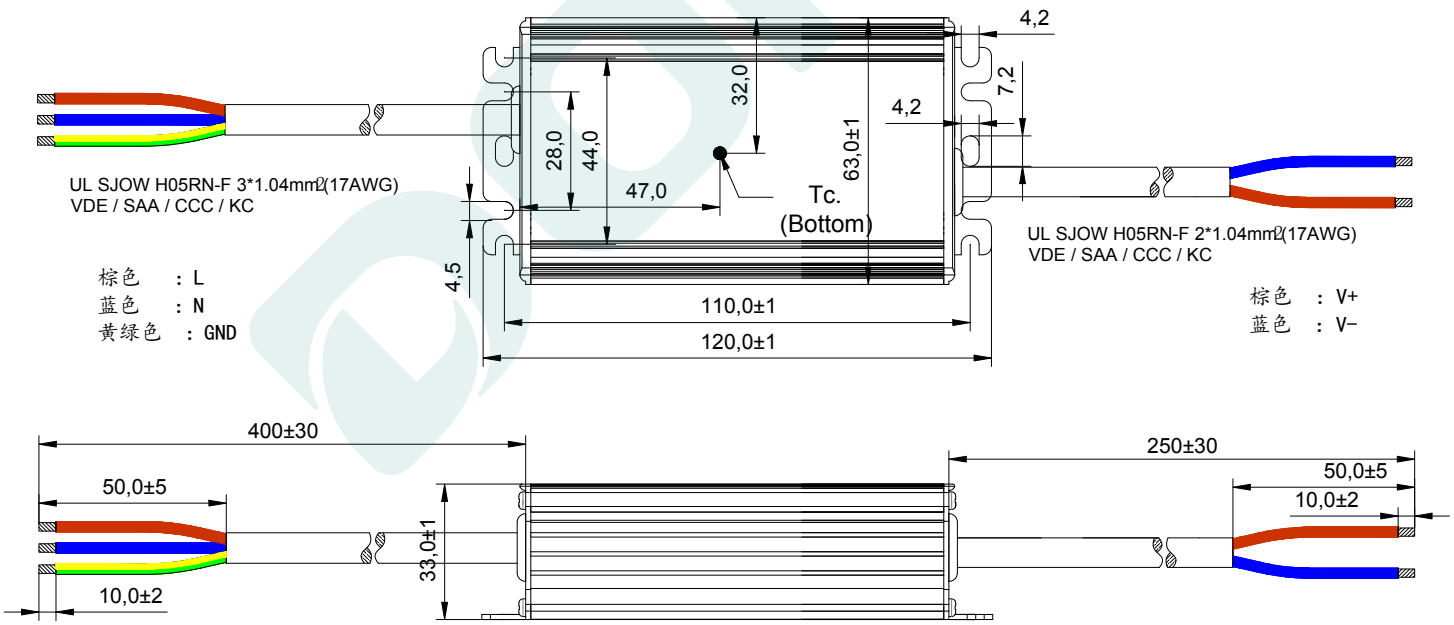

Weight

Weight	480g

Packaging

Packaging (mm)	L475*W350*H205

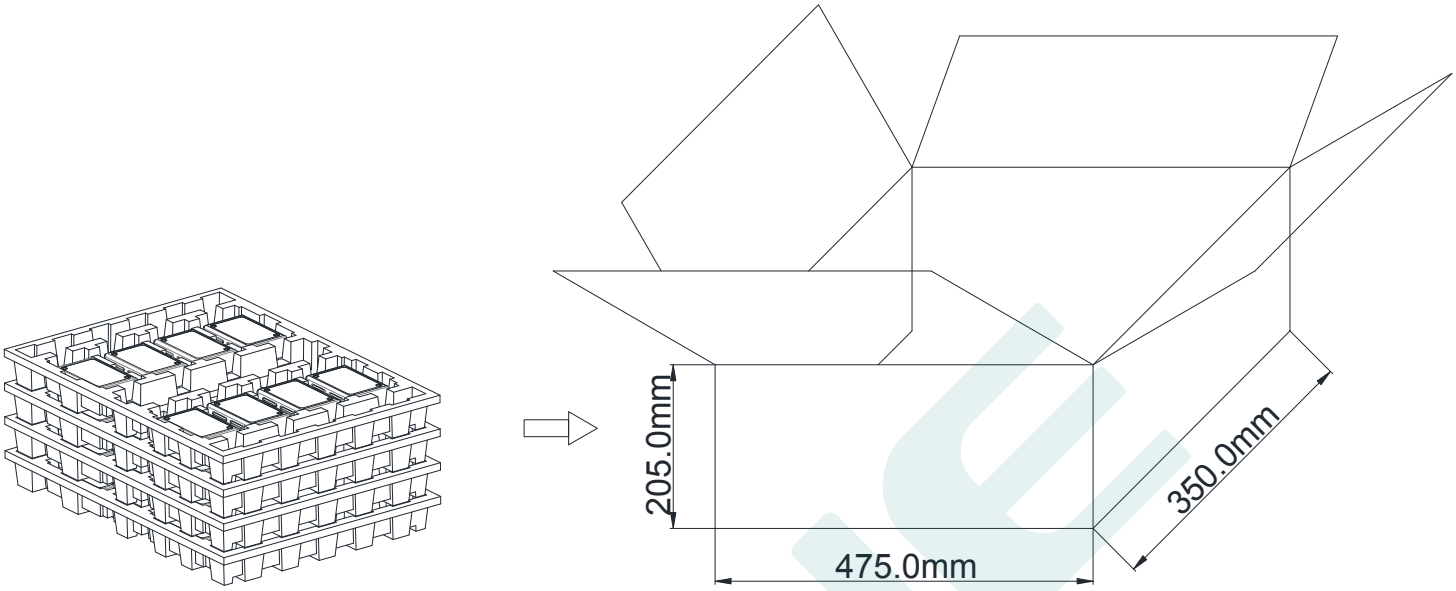

Note: One Carton 4 layers and 8 pcs each layer, total 32pcs/carton.

Note:

1. According to the certificate obtained by the LED DRIVER, the LED DRIVER with the English label is sold in Europe, America and India.
2. The LED DRIVER with Chinese label is only used for China market.

Version

DATE	DESCRIPTION	REV.	CHECK
2025.1.6	Initial version.	V1.0	
2025.3.22	1. Adjust the input under-voltage protection description and the "output power vs. input voltage" chart 2. Increase input overvoltage protection description	V1.1	
2025.4.11	Modify the description of Lifetime and Tcase VS Lifetime" Curve	V2.0	JH 2026.01.23 14:55:05 +08'00' LYF 2026.01.23 20:42:02 +08'00'

MANUFACTRUER		
EDIT	CHECK	APPROVE
LYS 2026.01.22 09:19:45 +08'00' SC 2026.01.22 09:48:00 +08'00'	GZK 2026.01.23 09:45:37 +08'00'	数字签名者：ZHS DN：cn=ZHS, o=DONE, ou=YFZX, email=zhanghongsheng@donepower.com, c=CN 日期：2026.01.24 14:07:52 +08'00'

Typical values of each parameter at 25 °C, unless otherwise noted.