PXS Series LED Drivers

DL-500V-400X/J-PXS Specification V1.1

GUANGDONG DONE POWER TECHNOLOGY CO.,LTD

Features

- Non-isolated Class I driver
- Input voltage: 200-480Vac
- Efficiency :96%(Typ.)
- Constant power drive and constant current output
- Isolated 3-in-1 dimming: 0-10V/PWM/Resistor; Timer dimming
- Adjustable output current with programmer
- Support dim-to-off without afterglow
- Auxiliary power supply: 12V/250mA
- Standby Power ≤ 1W @ 230Vac
- Input surge protection: DM 6kV, CM 10kV
- All-Around protection: IUVP/SCP/OVP/OTP
- Ingress protection rating: IP67
- Warranty: 5 years

Applications

Road lighting

Industrial lighting

Stadium lighting

Landscape lighting

Horticulture lighting

Model list

Model NO.	Input voltage	Output power	Output voltage	Output current	Default current	Eff. (Typ.)	THD (Typ.)	PF (Typ.)
DL-500V-400X-PXS DL-500V-400J-PXS	200-480V 50/60Hz	500W	180-400Vdc	1.0-2.5A	2.0A	96%	10%	0.95

Note:

1. Test conditions of the above parameters: Ta=25℃, 400Vac input, full load operation for 30 minutes;
2. When the input is 200-480Vac, the rated power is 500W, and special attention should be paid to the application; Please refer to the output power vs. input voltage curve
3. X Version: 0-10V/PWM/Resistor+12V Aux.
   J Version: RJ12+Knob Dimming

Input characteristics

Parameter	Min	Typ.	Max	Note
Rated input voltage	200Vac	230/277/347/ 400/415Vac	480Vac	
Input voltage range	180Vac	-	528Vac	
Input frequency	47Hz	50/60Hz	63Hz	
Leakage current	-	-	0.70mA	IEC 60598-1; 415Vac/60Hz
	-	-	0.75MIU	UL 8750; 480Vac/60Hz
Power factor(PF)	0.90	0.95	-	At 200-480Vac and full load
THD	-	10%	20%	At 200-480Vac and 70%~100% load
Standby Power	-	-	0.5W	Auxiliary power supply without load
Input current	-	-	2.7A	At 200Vac and full load conditions
Inrush current	-	-	120A	At 400Vac and 25℃ cold start

Output characteristic

Parameter	Min	Typ.	Max	Note
Efficiency@220Vac	94.0%	95.0%	-	At full load conditions，Io=1.25A
Efficiency@277Vac	95.0%	96.0%	-	At full load conditions，Io=1.25A
Efficiency@347Vac	95.0%	96.0%	-	At full load conditions，Io=1.25A
Efficiency@400Vac	95.0%	96.0%	-	At full load conditions，Io=1.25A
Efficiency@480Vac	95.0%	96.0%	-	At full load conditions，Io=1.25A
Output voltage range	180Vdc	-	400Vdc	Constant power range: 200-400Vdc
Open circuit voltage	-	-	470Vdc	
Output current range	1.0A		2.5A	Default current is 2.0A
Output current tolerance	-5%	-	+5%	At full load conditions
Output Current Ripple(PK-AV)	-	5% Iomax	10% Iomax	At full load conditions，20 MHz BW
Start-up overshot current	-	-	10%	At full load conditions
Line regulation	-3%	-	+3%	Measured at full load,input voltage changes from 200Vac to 480Vac,.
Load regulation	-3%	-	+3%	At 230Vac input and load change from 70% to 100%

Output characteristic

Parameter	Min	Typ.	Max	Note
Turn-on delay time	-	-	1.0s	At 220~480Vac and full load
12V output voltage	10.8 V	12V	13.2V	At 220-240Vac
12V output current	0 mA	-	300 mA	Reference ground is "Dim -"

Note: The output current range is limited by the input and output voltage, please refer to "I-V WORKING AREA" for details.

Dimming characteristic

Dimming	Parameter	Min	Typ.	Max	Note
0-10V Dimming (Optional)	Safe operating voltage	0V	-	12V	On the Dim+ pin, Dim+ source current 150uA
	Dimming range	0%	-	100%	-
	Recommended dimming input range	0V	-	10V	
	Turn-on voltage	0.6V	-	0.9V	
	Turn-off voltage	0.4V	-	0.6V	
PWM Dimming (Optional)	PWM in high level	9.5V	-	10.5V	-
	PWM in low level	0V	-	0.3V	-
	PWM in frequency scope	300Hz	-	2kHz	-
	PWM in duty cycle	0%	-	99%	Full power output at 99% duty cycle
	Turn-on Duty Cycle	6%	7%	9%	
	Turn-Off Duty Cycle	4%	5%	6%	
Resistor Dimming (Optional)	External resistor value	0KΩ	-	100kΩ	-
	Dimming range	0%	-	100%	-
Timer Dimming (Optional)	3 modes:Timing,Virtual Midnight,Self-adaptive				Default close, Set by the programmer
Output lumen compensation	Setting the output power with reference to the luminaire life				Default close, Set by the programmer

Protection

Parameter	Description
Input under voltage protection	Self-recovery type,When the input voltage is less than 200Vac, the output power decreases to 50%±20%.
Output overload protection	Hiccup mode，recovers automatically after fault condition is removed.
Output short circuit protection	Hiccup mode，recovers automatically after fault condition is removed
Over temperature protection	Self-recovery type: when the casing temperature is greater than 90℃, the output power decreases gradually.
Output over-voltage protection	Self-recovery type, automatically recovered after abnormal conditions are removed

Note: Unless otherwise specified, all specifications and parameters shall be measured at the conditions of 380Vac (50Hz), rated load and 25℃ of ambient temperature;

Environmental

Categories	Parameter
Operating temperature Ta	-40℃ ~ +55℃@277-480Vac, -40℃ ~ +45℃@200-276Vac
Operating case temperature for Safety Tc_s	-40℃ ~ 90℃
Operating case temperature and humidity for Warranty Tc_w	-40℃ ~ +75℃, 10% ~ 95% RH
Storage temperature,humidity	-40℃ ~ +80℃, 10% ~ 95% RH
Resistant to vibration	10Hz ~ 500Hz, 5G 12 min/cycle, X, Y, Z axis 72 min each
MTBF	200,000 hours (MIL-HDBK-217F),Ta=25℃,230Vac, 80% load
Lifetime	50,000 hours @Tc≤75℃, 230Vac, 80% Load

Safety

Safety Categories	Area	Standards	Approved
CCC	China	GB 19510.1, GB 19510.14	
CE	Europe	EN 61347-1, EN 61347-2-13	√
ENEC		EN 62384	√
CB	CB member state	IEC 61347-1, IEC 61347-2-13	√
SAA	Australia	AS/NZS 61347.1, AS/NZS 61347.2.13	
UL	USA	UL 8750	
CUL	Canada	CSA C22.2 No.250.13	
EAC	Russia	ГОСТ IEC 61347-1-2019 ГОСТ IEC 61347-2-13-2013	
BIS	India	IS 15885(PART 2/SEC 13)	

EMC

EMI/EMS Categories	Area	Standards	Approved
CCC	China	GB/T 17743, GB 17625.1	
CE	Europe	EN IEC 55015,EN 61547 EN IEC 61000-3-2;3-3;4-2,3,4,5,6,11	√
EAC	Russia	ГОСТ IEC 61547-2013 ГОСТ CISPR 15-2014 ГОСТ IEC 6100-3-2-2017 ГОСТ IEC 6100-3-3-2015	
FCC	USA	FCC Part 15 Subpart B	

RoHS

Our products comply with reference to RoHS Directive (EU) 2015/863 amending 2011/65/EU.

Safety Test Items:

Safety Test Item	UL	CE/CB/ENEC	CCC	Insulation Requirements
Input-Case/Ground		2000Vac		Basic insulation, 1min< 5mA
Input-Dim		2000Vac		Reinforced insulation, 1min< 5mA
Output-Case/Ground		2000Vac		Basic insulation, 1min< 5mA
Dim-Case		500Vac		
Insulation Resistance	≥10MΩ			Input-Dim,Test voltage:500Vdc
Ground Resistance	≤0.1Ω			25A/1min;Ta=25℃±10℃

Note: The driver is considered as a component that will be operated in combination with the final equipment. Since EMC performance will be affected by the complete installation, the final equipment manufacturers must re-qualify EMC Directive on the complete installation again.

I-V Working area

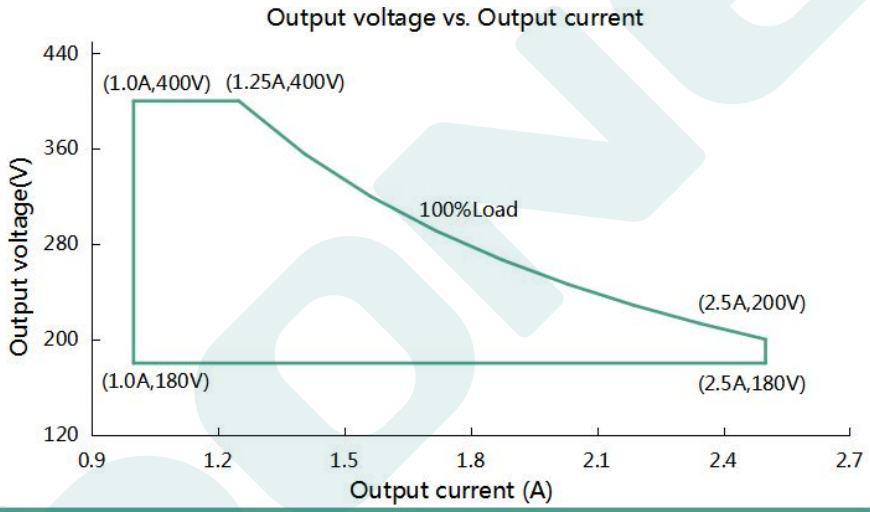

Load	Output parameter								
Output Voltage	180V	220V	240V	280V	300V	320V	340V	380V	400V
Output Current	2.50A	2.27A	2.08A	1.79A	1.67A	1.56A	1.47A	1.32A	1.25A
Output Power	450W	500W	500W	500W	500W	500W	500W	500W	500W

Inrush current

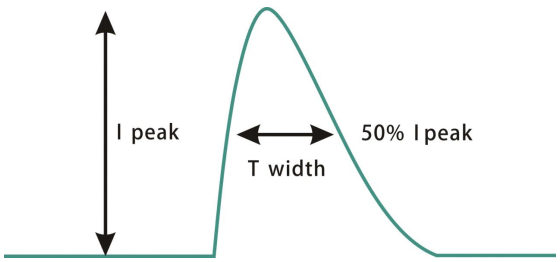

Input voltage	peak current	T (@ 50% peak current)
220Vac	82A	2.68us
277Vac	82A	2.68us
400Vac	103A	2.68us
480Vac	115A	2.75us

Output power vs. Input voltage

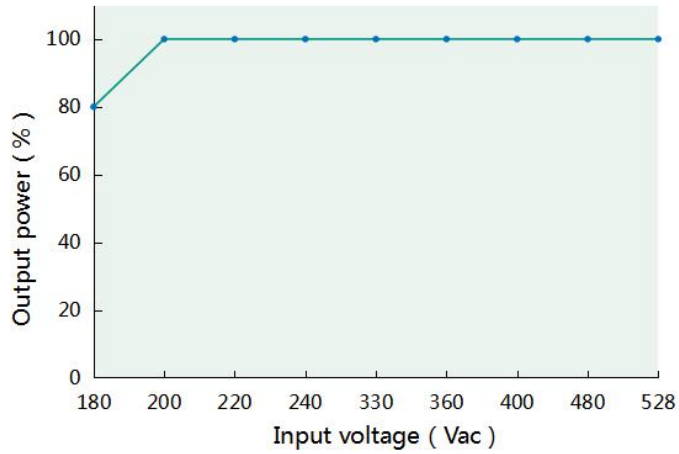

Eff. vs. Load

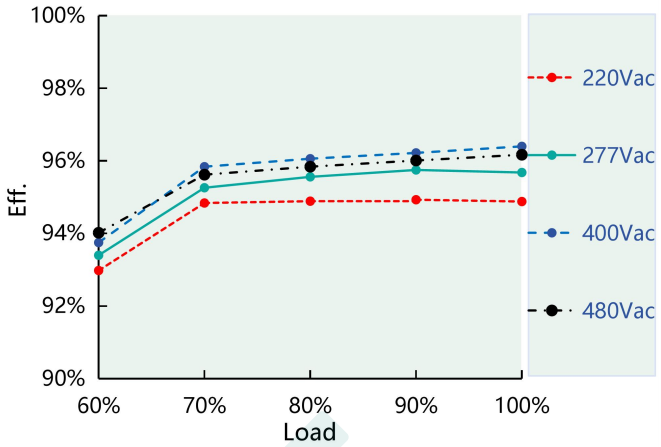

PF vs. Load

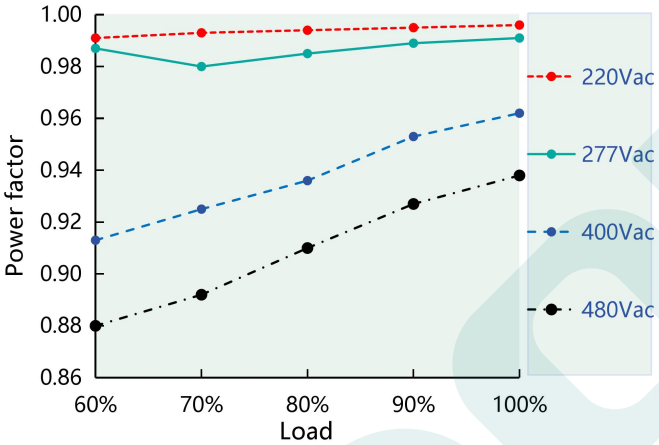

THD vs. Load

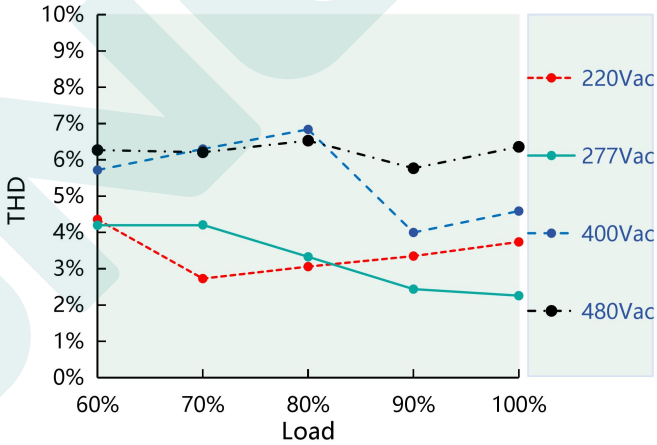

Life time vs. Tcase

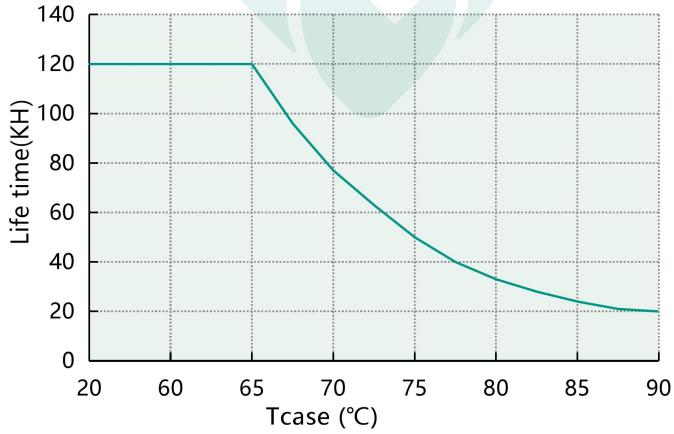

Output power vs. Tcase

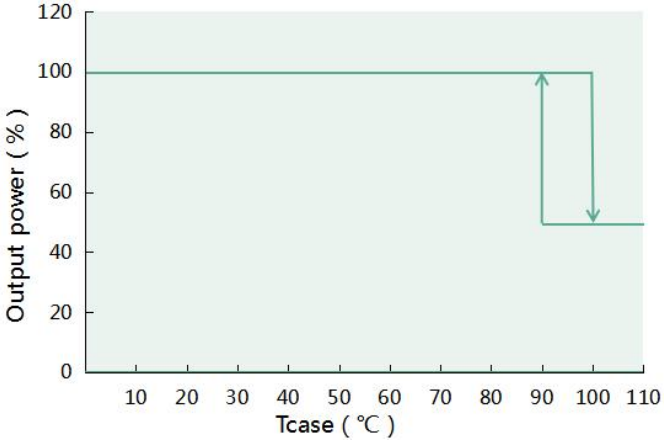

Dimming operation

3-in-1 dimming function (X version only)

Connect a 0-10V Dimmer or 10V PWM signal or resistor between DIM+ and DIM-

◎ **0-10V dimming:**

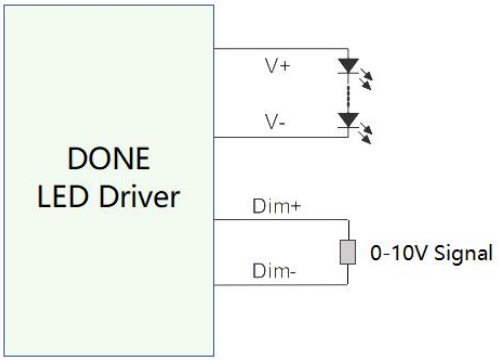

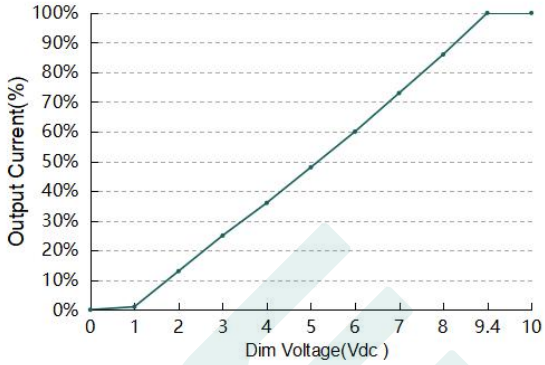

◎**PWM dimming:**

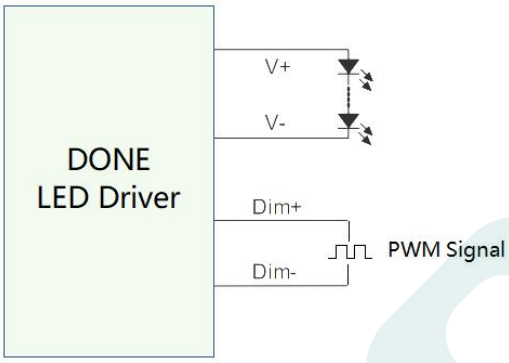

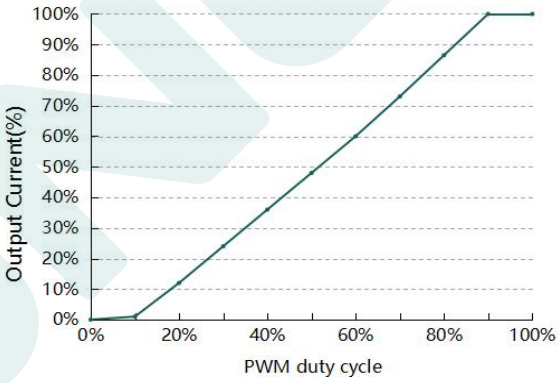

◎ **Resistor Dimming:**

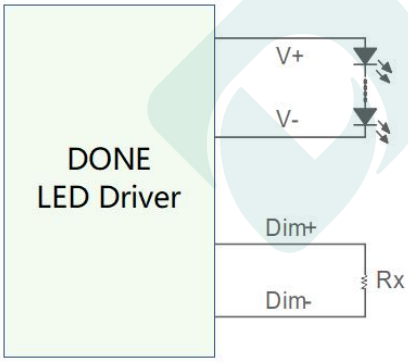

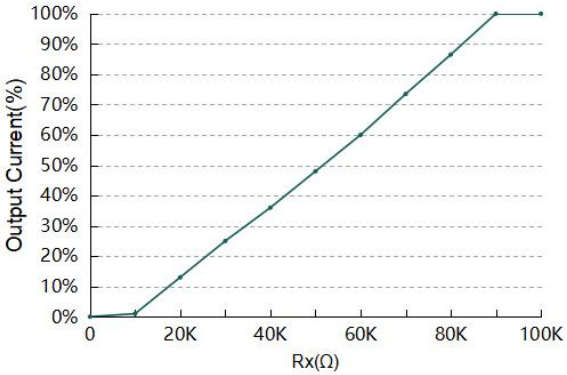

Note:

1.Positive and negative logic dimming can be programmed.

2.Dimming-off only applies to positive logic.

J Dimming Mode

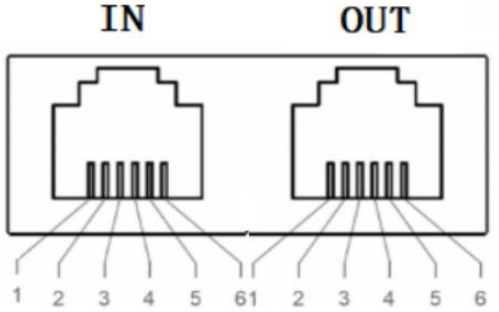

RJ12 JACK

RJ12 PIN	Description
1，6	Vaux+(12V,250mA)
2，5	DIM +
3，4	DIM -/Vaux-

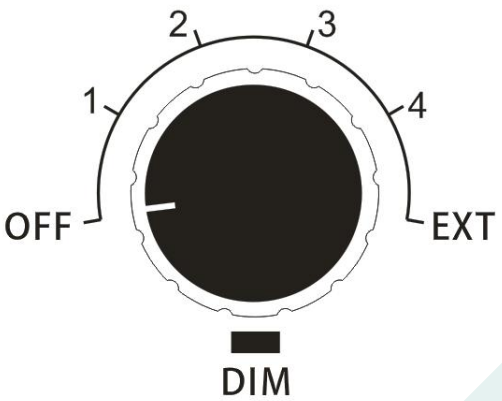

Switch	Description
Off	Shutdown
1	25%Ioset
2	50%Ioset
3	75%Ioset
4	100%Ioset
EXT	External Dimming

J-Type Power Supply (No Dimming Cable, Only Dimming Knob & RJ12 Port),When not master-slave cascaded, if the dimming knob is set to EXT mode, the RJ12 port receives a 3-in-1 dimming signal.The RJ12 port functions identically to the X/T-type dimming lines.

Multiple power supplies with RJ12 ports can be cascaded using RJ12 crossover cables, as follows:Connect the DIM_OUT port of one unit to the DIM_IN port of the next.Master unit The power supply whose DIM_IN port is unconnected.Slave units: Power supplies whose DIM_IN ports are connected to a preceding unit’s DIM_OUT port.Cascading Behavior Adjusting the master unit’s dimming knob synchronizes all slave units to follow the master’s dimming level.Slave units override local settings: Regardless of the slave’s knob position or switch state, all slave parameters (e.g., brightness, mode) mirror the master’s configuration.

Note:

1、RJ12 ports are non-waterproof. Ensure dry operating conditions to avoid liquid ingress, which may disrupt power supply functionality.

2、Cascade only with power supplies sharing identical RJ12 interface definitions.Do not short-circuit auxiliary power outputs (Vaux+, Vaux-) if the cascade exceeds 6 units, as this may damage cascading ports and cables.

Caution:

1. It is recommended to design LED beads in series first and then in parllel.
2. There is no excessive heat-dissipating copper foil left on the aluminum substrate.
3. The creepage distanec of the aluminum substrate wiring > 5.6mm.
4. The creepage distance between LED+ and LED- on the aluminum substrate > 2.5mm.
5. The insulation level of the LED lamp board should meet the requirements of reliability design. The recommended withstand voltage between the LED lamp beads and the aluminum substrate is 100% full inspection > 3.5KVAC.
6. The final right of interpretation of the parameters above belongs to Guangdong Done Power Technology Co., Ltd.

Mechanical specification

Size（mm）	L236*W83*H40mm

DL-500V-400X-PXS

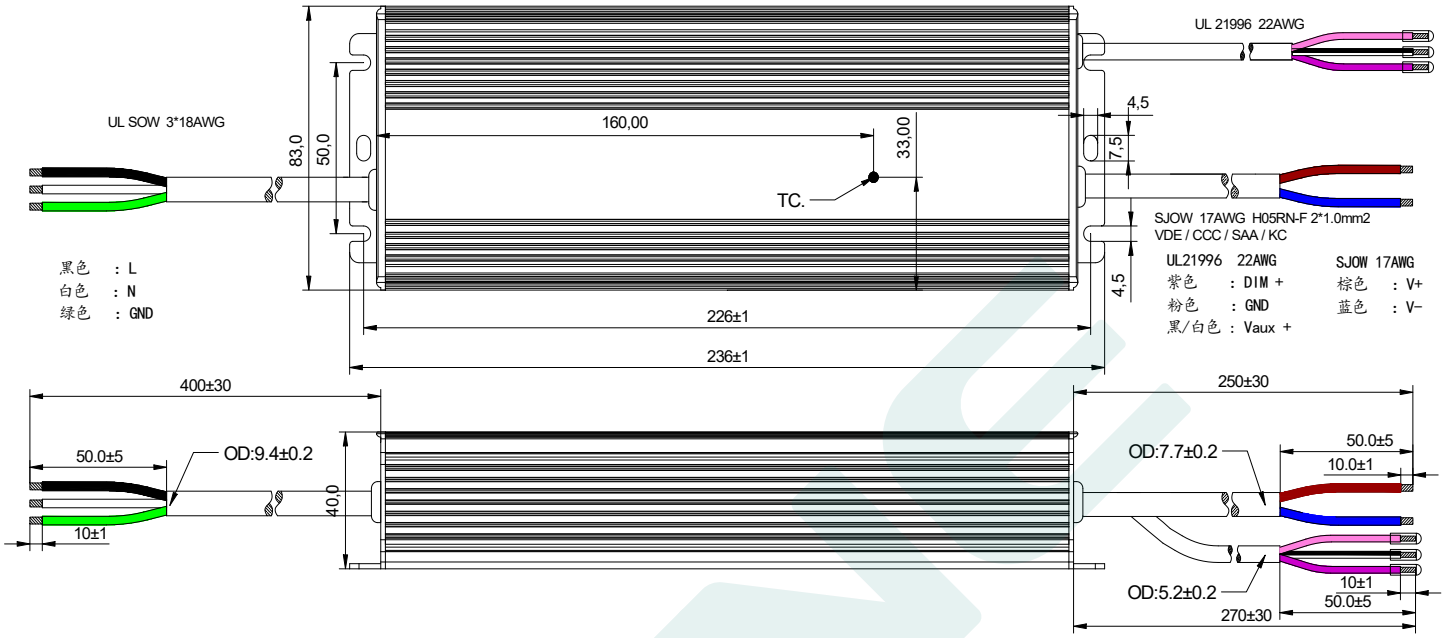

Size（mm）	L236*W90*H44.5mm

DL-500V-400J-PXS

Weight

Weight	1440g

Packaging

Packaging（mm）	L475*W350*H160mm

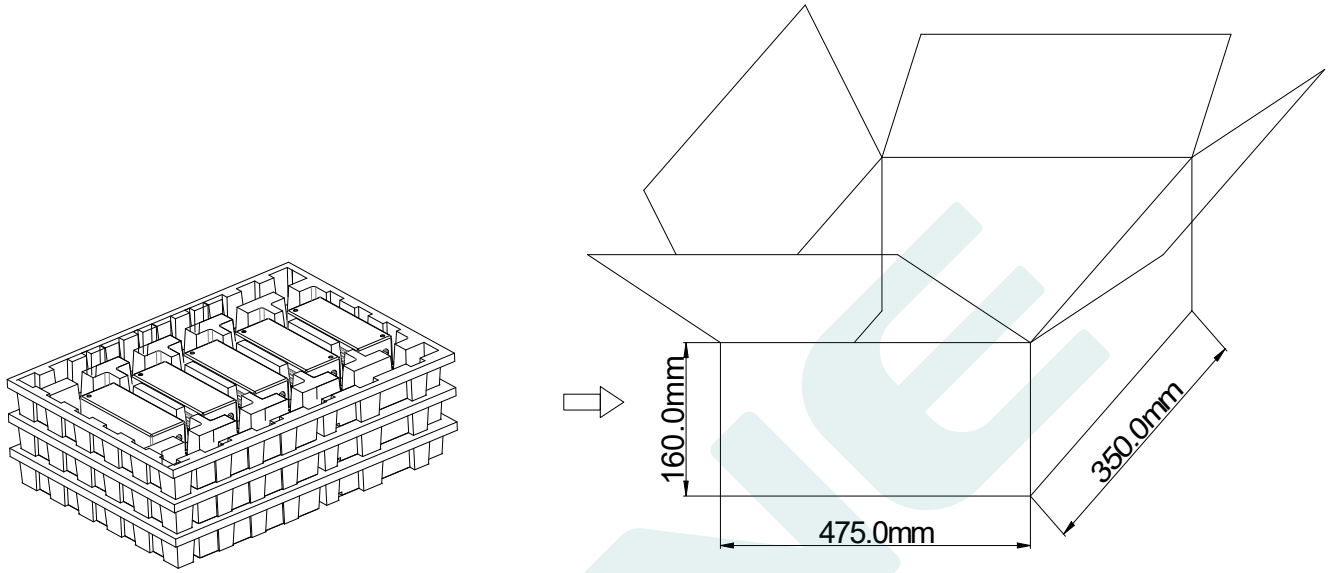

Note: A box has 3 layers, 4 pieces per layer, a total of 12 pieces/box.

Note:

1. According to the certificate obtained by the LED DRIVER, the LED DRIVER with the English label is sold in Europe, America and India.
2. The LED DRIVER with Chinese label is only used for China market.

Version

DATE	DESCRIPTION	REV.	CHECK
2025.8.26	Initial version	V1.0	
2025.10.27	1. Modify the PF (Power Factor) test conditions 2. Update Certification logo	V1.1	JH 2025.10.28 16:59:44 +08'00' DYX 2025.11.05 10:37:39 +08'00'

MANUFACTRUER		
EDIT	CHECK	APPROVE
ZMH 2025.10.27 14:33:11 +08'00' YS 2025.10.27 14:38:42 +08'00'	TQC 2025.10.28 16:53:13 +08'00'	数字签名者：ZHS DN：cn=ZHS, o=DONE, ou=YFZX, email=zhanghongsheng@donepower.com, c=CN 日期：2025.11.05 10:33:04 +08'00'