PXG SERIES LED DRIVERS

DL-60Z-X-PXG SPEC V1.1

Features

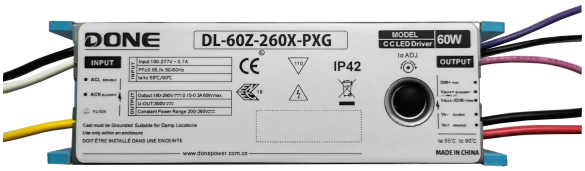

- Class I structure
- Input voltage: 100-277V ~ 50/60Hz
- Efficiency :93.5% (Typ.)
- Constant current output control mode,with constant power limitation
- Metal shell structure, protection grade:: IP42
- Lightning level: differential mode 6kV, Common mode 10kV
- Dim-off function available.
- Function selection:

  Output current is adjusted by external potentiometer

  Isolation dimming function: 3-in-1 dimming (0-10V, PWM, resistance)

  Isolation Auxiliary Power supply :12VDC 300mA
- Lifetime design: 5 years

Applications

Road lighting、Industrial lighting、Venue lighting

Floodlight lighting、Landscape lighting 、Plant lighting

Model list

Model NO.	Input voltage	Output power	Output voltage	The default current	Eff.	THD.	PF
DL-60Z-260X-PXG	100-277V 50/60Hz	60W	180-260Vdc	0.25A	≥93.5%	≤10%	≥0.95

Note:

1. Test conditions of the above parameters: Ta=25℃,230Vac input, full load operation for 30 minutes;
2. When the input is in the range of 100-277VAC, output the rated power of 60W,please ensure that the input voltage is within the allowable range.

   Please refer to "THE OUTPUT POWER VS INPUT VOLTAGE" curve chart for details.

Input characteristics

Parameter	Min	Typ.	Max	Note
Rated input voltage	100Vac	230Vac	277Vac	-
Input voltage range	90Vac	-	305Vac	-
Rated frequency	47Hz	50/60Hz	63Hz	-
Power factor	-	0.95	-	@230Vac full load
	0.90		-	@277Vac full load
T.H.D.	-	-	10%	@230Vac/50Hz full load
Input current	-	-	0.7A	@100Vac full load
Inrush current	-	-	70A	@230Vac, cold start (25℃)

Output characteristic

Parameter	Min	Typ.	Max	Note
Rated current DL-60Z-260X -PXG	-	0.23A	-	The load is 260VDC
Output current range DL-60Z-260X -PXG	0.15A	-	0.3A	Potentiometer adjustable range
Output voltage range DL-60Z-260X -PXG	180V	-	260V	Constant power range: 200-260VDC
Constant power output voltage range	200V	-	260V	Maximum output power 60W
Constant current output voltage range	180V	-	260V	Maximum output current 0.3A
No-load voltage DL-60Z-260X -PXG	-	-	300V	-
Efficiency@100Vac DL-60Z-260X -PXG	-	89%	-	@100Vac full load

Output characteristic

Parameter	Min	Typ.	Max	Note
Efficiency@230Vac DL-60Z-260X -PXG	-	93.5%	-	@230Vac full load
Accuracy of output current	-5%	-	+5%	full load
Ripple of output current	-	5%	-	full load
Line regulation	-3%	-	+3%	full load
Load regulation	-7%	-	+7%	full load
Starting time	100ms		1000ms	@100-277Vac full load

Note: The output current range is limited by the input and output Voltage, Please refers to "I-V WORKING AREA" for details;

Dimming Characteristic

Dimming function		Min	Typ.	Max	Instructions
0-10V Dimming (Optional)	Safe applied voltage range	0V	-	12V	Refer to note 2
	Dimming output range	0	-	100%	-
	Rated dimming voltage range	0V	-	10V	-
PWM Dimming (Optional)	PWM high level	9.5V	-	10.5V	-
	PWM low level	0	-	0.3V	-
	PWM frequency band	300Hz	-	2000Hz	-
	PWM duty cycle	0	-	100%	-
Resistor Dimming (Optional)	External resistance value	0KΩ	-	100KΩ	-
	Dimming output range	0	-	100%	-

Note:

1. Output current of dimming port: 100uA (typical value);
2. The maximum voltage applied to the dimming port is suggested below 12V,but it also is protected against wrong voltage that below 230VAC or 300VDC.Please don' t keep the wrong voltage apply to the port for a long time. Otherwise,it is possible to be damaged.

Protection

Function	Function instructions
Output overload protection	Protection mode: hiccup mode, recovers automatically after fault condition is removed.
Output short circuit protection	Hiccup mode: recovers automatically after fault condition is removed
Over temperature protection	Self-recovery type: when the housing temperature is greater than 95±5℃, the output power decreases gradually.
Output over-voltage protection	Protection mode: Hiccup mode or clamped in output highest voltage , the product is not damaged, LED driver works normally after fault condition is removed.

Note: Unless otherwise specified, all specifications and parameters shall be measured at the conditions of 230Vac (50Hz), rated load and 25℃ of ambient temperature;

Environmental

Environmental categories	Parameter
Working temperature	-40 ~ +40℃ @100-200Vac; -40 ~ +55℃ @200-277Vac (refer to "Life Curve ")
Working humidity	20 ~ 95% RH, non-condensing
Tcase	95±5℃
Storage temperature、humidity	-40~+80℃, 10 ~ 95% RH
Resistant to vibration	10 ~ 500Hz, 5G 12 min/cycle, X, Y, Z axis 72 min each
MTBF	100Khrs min. MIL-HDBK-217F (Ta=25℃)
Lifetime	70000H@Tcase75℃,(Please refer to **Lifetime VS Tcase** curve for details)

Safety and EMC

Safety categories	Standard
Safety	GB19510.1、GB19510.14、EN61347-1、EN61347-2-13、IEC61347-1、IEC61347-2-13、AS/NZS61347.1、AS61347.2.13、EN 62384、UL8750;
EMC	EN 55015、EN 61000-3-2 、GB/T 17743、GB17625.1、 EN 61000-3-3
Surge protection	Differential L/N ± 6 KV (2Ω), Common L/N-PE± 10 KV (12Ω) Refer to IEC61000-4-5 2014
High-pot test	I/P-PE :1.5KVac I/P-DIM:1.5KVac
Insulation impedance	I/P-PE:100MΩ / 500VDC; 25℃/ 70% RH
Leakage current	< 0.7mA @277Vac

Note:

1. Attention! As a component of the whole, the EMC performance of the final product is not only decided by the driver, even if the driver is well-designed and fulfil all the required compliance. The final equipment manufacturers must re-qualify EMC Directive on the complete product.
2. Because of the restart of OVP, to keep well connection of the load is recommended.

I-V Working area

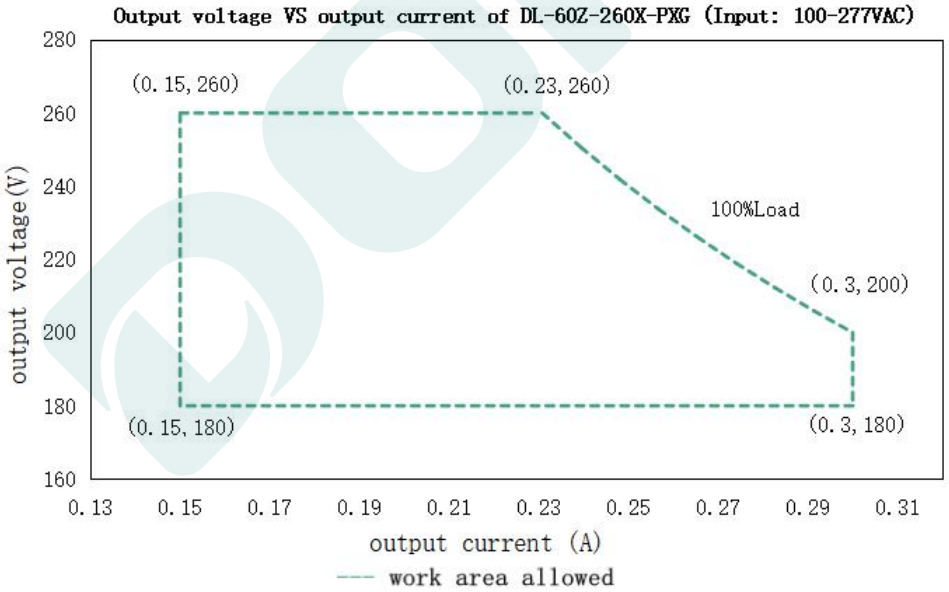

Load	Output								
Load working Voltage	180V	190V	200V	210V	220V	230V	240V	250V	260V
Io_ MAX	0.3A	0.3A	0.3A	0.286A	0.273A	0.261A	0.25A	0.24A	0.231A
Po_ MAX	54W	57W	60W	60W	60W	60W	60W	60W	60W

Eff. VS Output voltage (DL-60Z-260X -PXG)

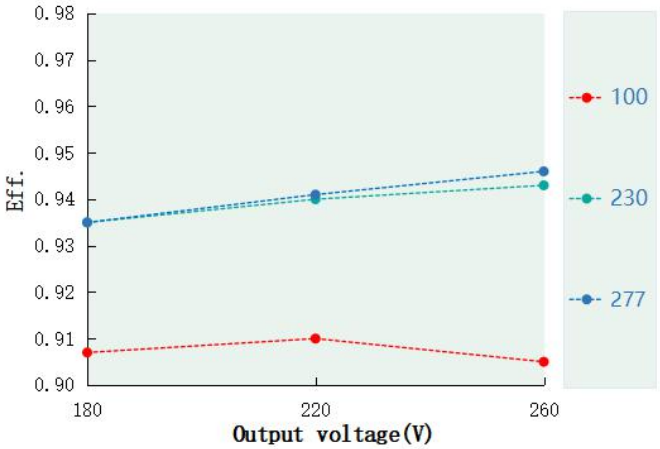

Power Factor VS Input Voltage (DL-60Z-260X -PXG)

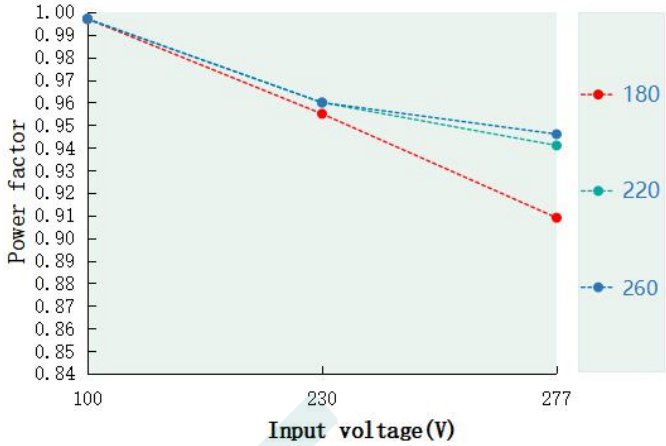

T.H.D. VS Output voltage (DL-60Z-260X -PXG)

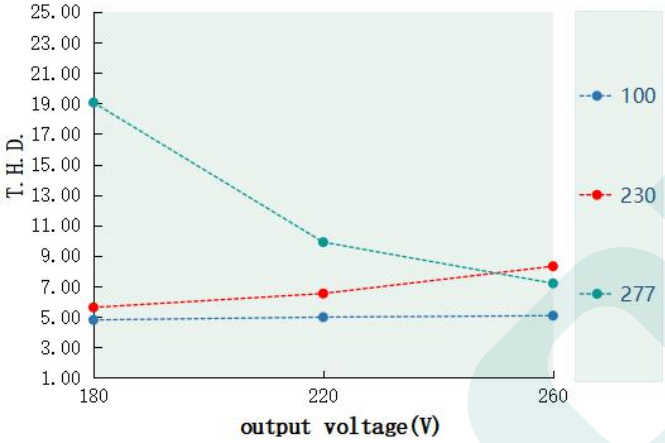

Lifetime VS Tcase (DL-60Z-260X -PXG)

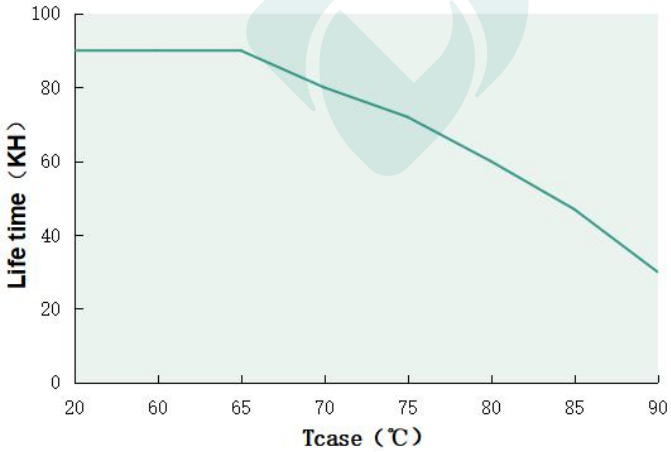

Output power VS Tcase (DL-60Z-260X -PXG)

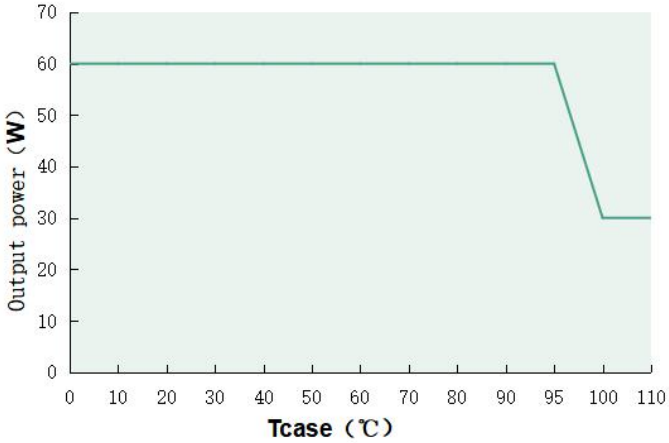

Inrush Current (DL-60Z-260X -PXG)

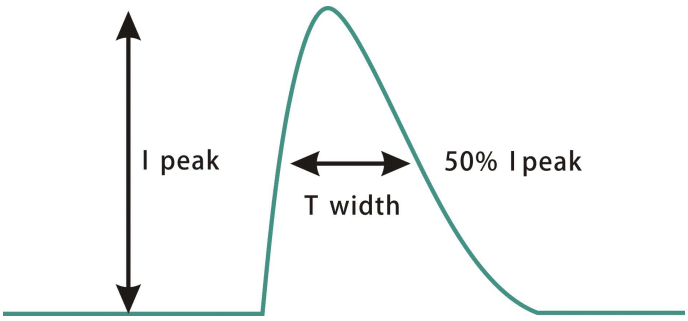

Input voltage	Peak current	T(@50% Peak current)
100Vac	46A	167us
230Vac	66A	185us
277Vac	70A	176us

Output power VS Input voltage

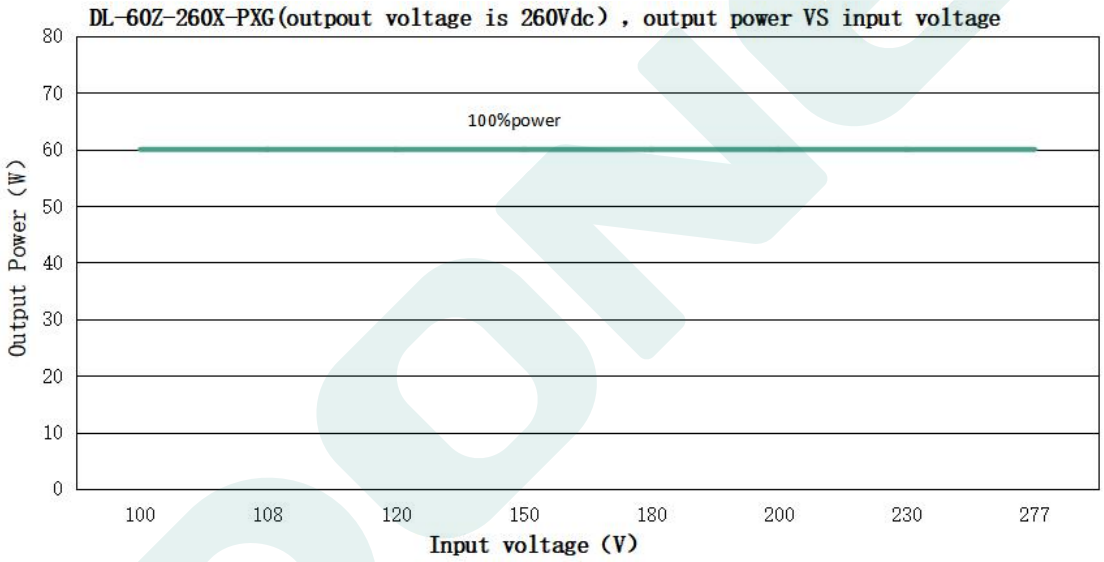

DL-60Z-260X -PXG Input voltage VS Output Current(Vo=260Vdc) VS Output Power								
Input Voltage	120Vac	150Vac	180Vac	200Vac	230Vac	277Vac	120Vac	150Vac
I out	0.231A	0.231A	0.231A	0.231A	0.231A	0.231A	0.231A	0.231A
Pout	60W	60W	60W	60W	60W	60W	60W	60W

Dimming operation

※ Three-in-one dimming function (S/X version)

A. Connect a resistor 0-100K or 0-10V DC voltage or 10V PWM signal between DIM+ and GND to adjust the output current.

B. Output current of dimming port: 100uA (typical value).

◎Applied voltage of 0-10V:

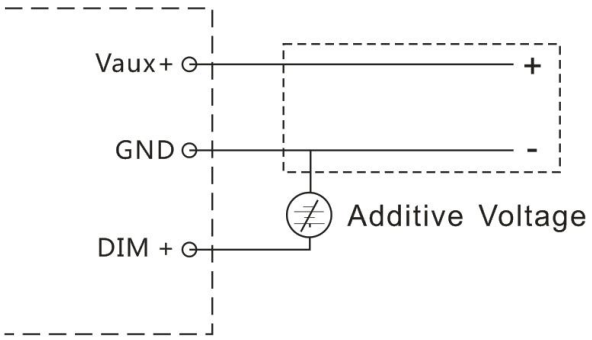

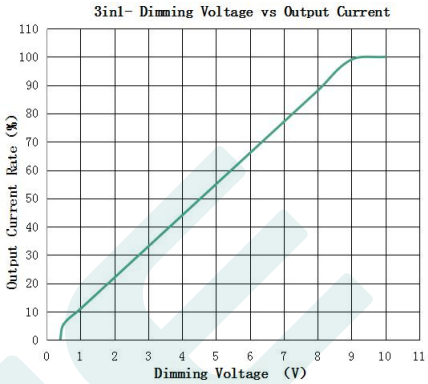

◎ Applying additive 10V PWM signal (Frequency range: 300Hz-2K Hz) :

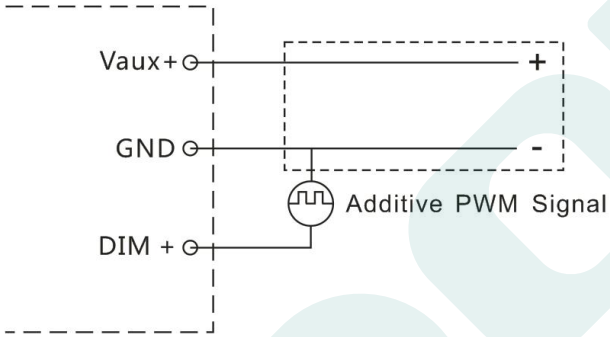

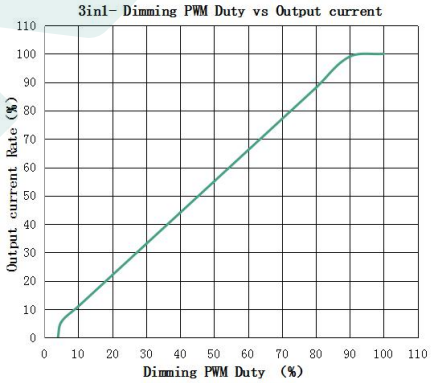

◎Applied an additional 0-100K resistor:

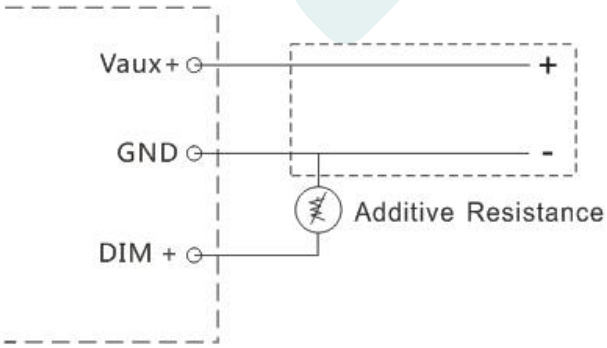

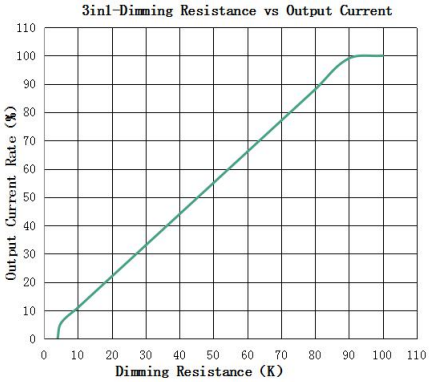

Mechanical Specification

Dimension（mm）	L140*W44*H32

DL-60Z-260X-PXG

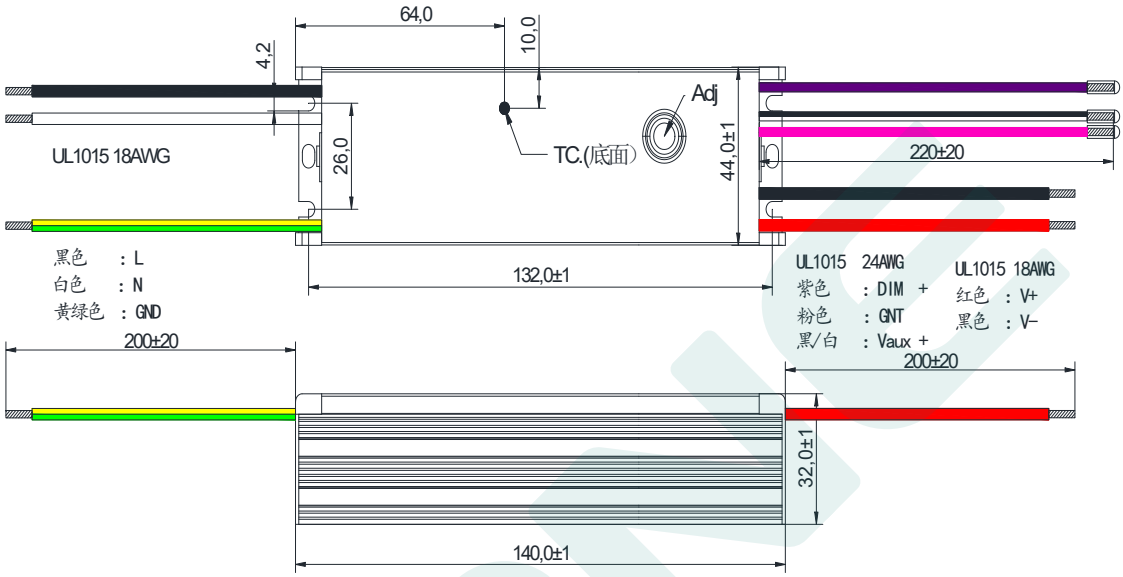

Weight

Weight	275 g

Packaging

BOX（mm）	L475*W350*H205

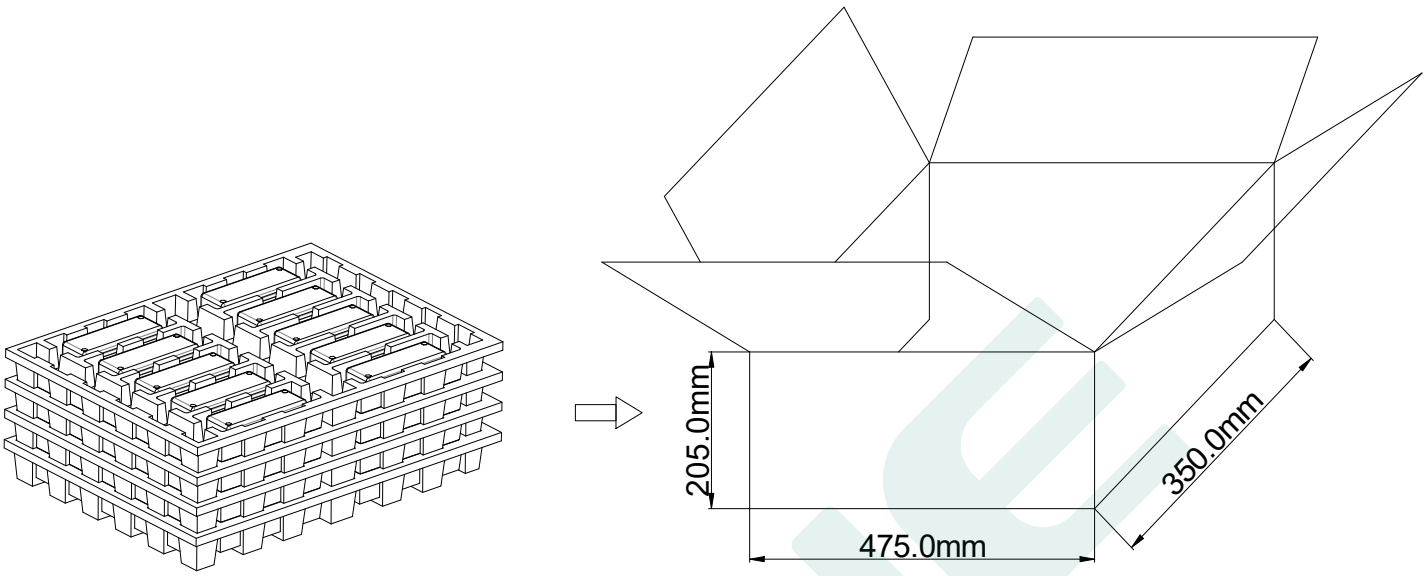

Note：One Carton 4 layers and 10 pcs each layer, total 40pcs/carton.

Note:

1. According to the certificate obtained by the LED DRIVER, the LED DRIVER with the English label is sold in Europe, America and India.
2. The LED DRIVER with Chinese label is only used for China market.

Revise & Version

DATE	DESCRIPTION	REV.	CHECK
2024.5.10	Initial version.	V1.0	
2025.4.23	Update Package	V1.1	JH 2025.04.25 19:36:55 +08'00' 邓延香 DYX 2025.04.26 08:54:07 +08'00'

MANUFACTRUER		
EDIT	CHECK	APPROVE
周敏慧 ZMH 2025.04.24 16:43:46 +08'00'	岑锐秋 CRQ 2025.04.24 17:08:07 +08'00'	张鸿生 数字签名者：张鸿生 DN：cn=张鸿生, o, ou, email=978425630@qq.com, c=<无 日期：2025.04.28 09:14:02 +08'00'